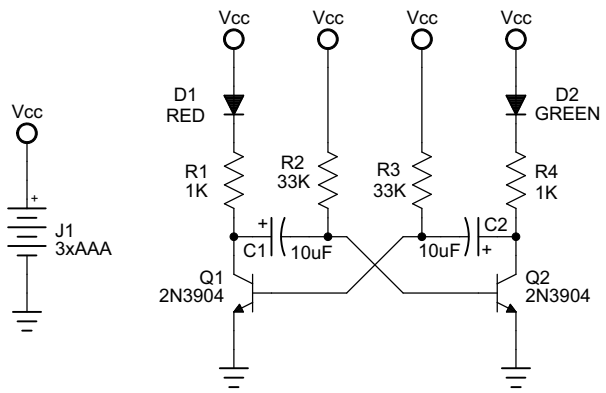

WEE BLINKY
Drawn by Dale Wheat - 20 February 2009