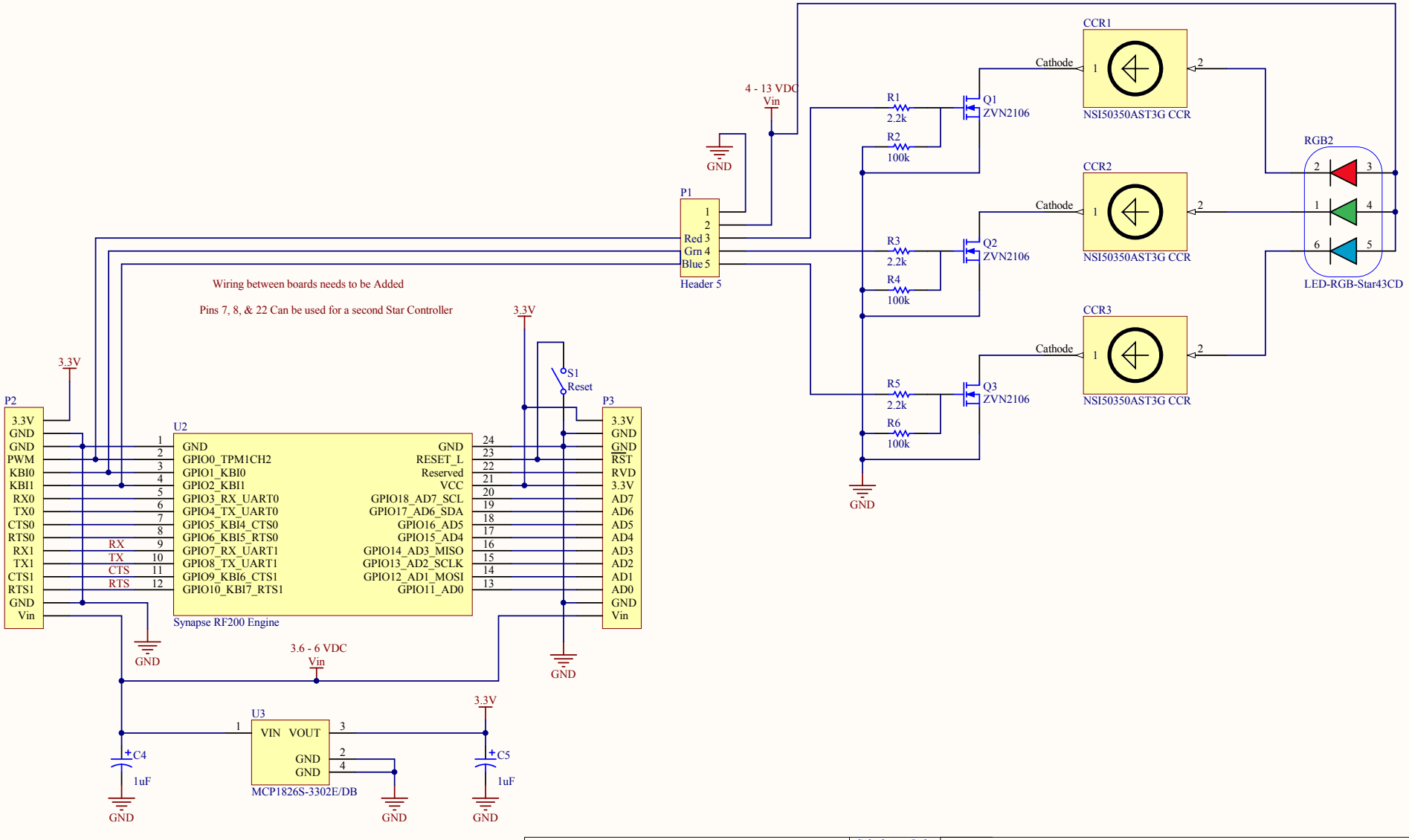

Title *Synapse Receiver Bundle*			*Solarbotics Ltd.* *3740D - 11A St. NE* *Calgary, Alberta* *Canada* *T2E 6M6*
Size: A1	Number: jd005	Revision: 4.0	
Date: 5/15/2013	Time: 3:35:31 PM	Sheet 1 of 1	
File: Project Aurora LED side Circuit Diagram			

SOLARBOTICS Ltd